single port right angle; SMT

“fully shielded” Type

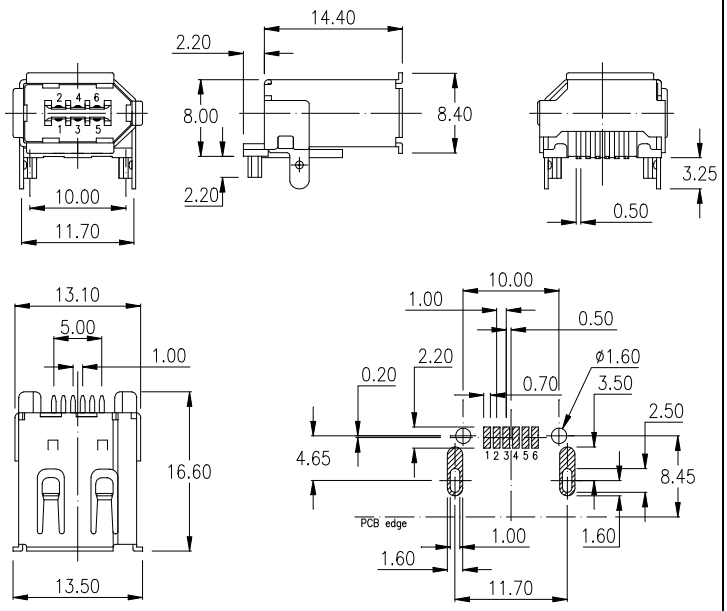

ORDER CODE: **IES - B06 - SIF1 - 98**
(**- W06 -** if white housing)

single port vertical; soldertail

“fully shielded” Type

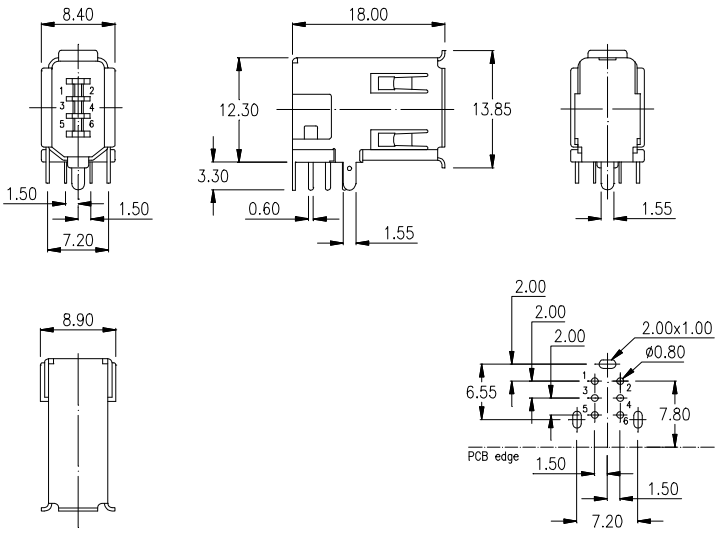

ORDER CODE: **IES - B06 - VIF1 - 98**
(**- W06 -** if white housing)

single port right angle; soldertail

“fully shielded” Type

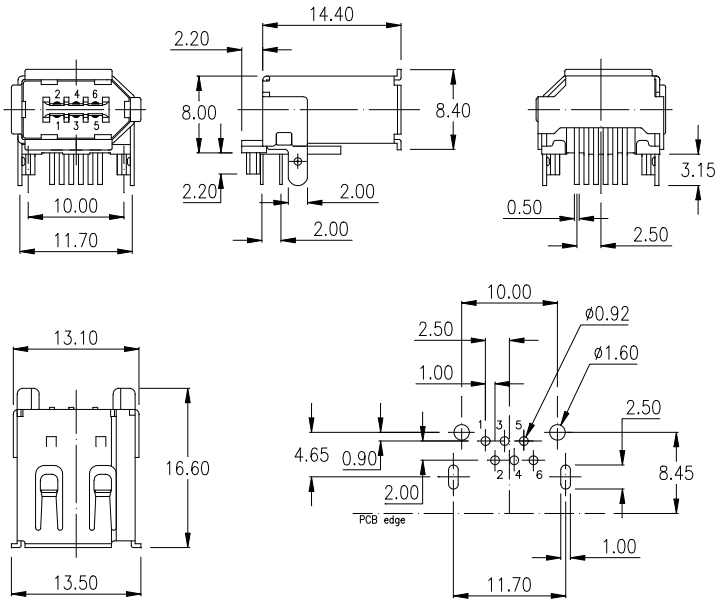

ORDER CODE: **IES - B06 - RIF1 - 98**
(**- W06 -** if white housing)

Specification

Material

Contact	*(RoHS compliant)*	Phosphor bronze
Plating:		
Contact area		Au 30µ” over Ni
Solder area		Sn *(leadfree)*
Housing	*(RoHS compliant)*	PBT UL 94-V0
SMT housing	*(RoHS compliant)*	Nylon 9T UL 94-V0
Shell	*(RoHS compliant)*	brass, 80µ”-120µ” Ni plated

Mechanical

Mating cycles	1.500 min.

Electrical

Current rating	1,5 A max. 1 Contact (Signal only)
Voltage rating	30V AC (rms)
Withstanding voltage	500V AC (rms) 1 Minute
Insulation resistance	100MΩ min. (500V DC)
Contact resistance	30mΩ max.

Others

Operating temperature	-55° C to +85° C
Processing temp. for SMT type	+260° C for 10 sec. max.